Elcometer PERFORMANCE Blast Machines have been designed to minimise pressure loss and maximise air flow - allowing you to blast for longer, reduce media costs and minimise downtime.

Rating Plate
Clear information on pressure ratings, UKCA and CE approval to both PED 2014/68EU and PE(s)R 2016.

High Flow Dish
Concave dish for easy refill and deflector plate for operator safety.

Easy to manoeuvre
Balanced design makes it easy to move on site.

High flow 38mm (1½") Pipework
38mm (1½") pipework throughout ensures efficient airflow and minimal pressure loss

Easy Access
Large inspection access wide enough for both arms.

1½" (38mm) Remote Control Valves
Minimises air flow loss and shuts the blast system down quickly and safely.

Fast Flow Cones
45/90° cone to maximise abrasive flow rate.

Moisture Separator
Prevents water and oil from entering the blast pot.

Precision Media Valves
Enable finger tip adjustment allowing you to use less abrasive to cover the same area in less time.

Flexible Pusher Line
Hard wearing flexible pusher line to maximise air flow.

elcometer®

The Elcometer Abrasive Blast Machine Range Comparison Summary

From small maintenance projects to large scale refurbishment contracts, from blasting small industrial parts to ballast tanks, or iron gates to bridges...

...whatever the scale of your project Elcometer blast equipment is engineered to last longer, work harder and perform better.

CONTRACTOR

12bar (174psi) | 32mm (1¼")

- Industry standard valves & RCV
- 32mm (1¼") pipework
- Great efficiency & productivity
- 12bar (174psi)

Capacity	40-200 litres (1.41-7.06cu ft)
Maximum Working Pressure (WP)	12bar (174psi)
Pipework Diameter	32mm (1¼")
UKCA & CE Approved to PED 2014/68EU & PE(s)R 2016	UKCA & CE Approved
Abrasive Media Valve	Standard Grit Valve (SGV)
Valve Liner	Standard
Mixer T	Elcometer Engineered Standard Mixer T
Remote Control Valve	Standard
Exhaust T	Elbow
Construction	Made in Great Britain

PERFORMANCE

12bar (174psi) | 38mm (1½")

- Elcometer engineered valves & RCV
- 38mm (1½") high flow pipework
- High efficiency & productivity
- 12bar (174psi)
- Ideal for all projects

20-285 litres (0.70-10.06cu ft)

12bar (174psi)

38mm (1½")

UKCA, CE & ASME Approved

Elcometer GV/AGV

elcoTOUGH™ Long Life Liner

Elcometer Engineered High Resistance Long Life Mixer T

Elcometer Engineered

90° Reinforced Elbow & Sacrificial Wear Plug

Made in Great Britain

PERFORMANCE HP

15bar (217psi) | 38mm (1½")

- Elcometer engineered valves & RCV
- 38mm (1½") high flow pipework
- Ultimate efficiency & productivity
- High pressure 15bar (217psi)
- Ideal for large scale contracts and long hose runs

100-285 litres (3.53-10.06cu ft)

15bar (217psi)

38mm (1½")

UKCA & CE Approved

Elcometer GV/AGV

elcoTOUGH™ Long Life Liner

Elcometer Engineered High Resistance Long Life Mixer T

Elcometer Engineered

90° Reinforced Elbow & Sacrificial Wear Plug

Made in Great Britain

Elcometer Performance Abrasive Blast Machines are engineered to work harder, last longer and perform better

Productivity is a function of pressure and air flow.

"For every psi at the nozzle above 100psi (7bar) you get a 1.5% increase in productivity."

ENHANCE YOUR PERFORMANCE

Optimising the volume, speed and pressure of air to the nozzle results in greater blasting efficiency. Higher pressure and speed of air at the nozzle will also allow use of a larger nozzle size, resulting in faster blast area coverage, allowing you to cover more in less time.

Operating at more efficient blast pressures will also result in less abrasive usage thus saving money and clean up time!

Minimise Your Pressure Loss

The design of your blast machine together with your blast hose diameter, length, age, wear and quality can effect the pressure at the nozzle.

This is why we manufacture blast machines which have a maximum working pressure of either 12 or 15bar (174 or 217psi) and have been engineered for minimal pressure loss - so that you will always have the nozzle pressure you need to maximise your productivity.

Maximise Your Cubic Air Flow Per Minute

With an internal pipe diameter of 1½" (38mm) across our blast machines we have optimised the volumetric flow rate of air through the system every minute so that you can select a larger nozzle diameter, allowing you to blast more in less time.

Blast for Longer

Elcometer blast machines have a maximum working pressure of 12 or 15bar (174 or 217psi) allowing you to maintain the nozzle pressure over significantly longer lengths of hose, even as it wears.

Reduce Your Media Costs

Elcometer blast machines are designed to deliver the optimum pressure and flow rate at the nozzle, allowing you to use less abrasive to blast the same area to the same profile, saving you money.

Our abrasive media valves come with fingertip adjustment so that you can precisely control the media flow, even whilst blasting.

Reduce Your Maintenance

Elcometer's blast machines are engineered to be extremely durable so that parts last longer. Forcing abrasive through a high pressure system will, however, always create wear and tear so we have designed our machines to be easy and fast to maintain so that you can maximise your blast time.

Be In Control

Designed for precision control and minimal air flow loss, the Elcometer RCV4000 & RCV4000+ Remote Control Valves allow you to safely control a blast machine at the nozzle, fast.

ELCOMETER ENGINEERED

Every aspect of an Elcometer Blast Machine uses high quality components, manufactured to an industry leading specification and designed and engineered by Elcometer experts.

Heavy Duty Construction

6mm (¼") steel wall thickness, double weld seams & coated with a tough 2 pack epoxy multi-coat paint for corrosion protection.

High Flow Pipework & Valves

Large bore 38mm (1½") pipework throughout ensures efficient airflow and minimal pressure loss.

Concave Dishes

Our high flow concave dish comes complete with a deflector plate for fast filling & operator safety.

Fast Flow Cones

45/90° cone to maximise abrasive flow rate.

Remote Control Valves

Used with a deadman's handle, the 1½" (38mm) remote control valve minimises air flow loss and shuts the blast system down quickly and safely.

Precision Metering Valves

Range of precision metering valves offer accurate control of your blast media, even whilst blasting.

Exhaust Manifolds

Hard working exhaust manifolds allow air to exhaust through the silencer quickly & safely, with minimum wear.

Moisture Separators

High performance moisture separator prevents water and oil from entering the blast pot.

PERFORMANCE

Hard-wearing Mixer T's

Machined out of a single block of high grade machine steel, the hard-wearing Elcometer Mixer T is designed to last.

Serviceable Exhaust T's

When a blast machine exhausts, it can quickly wear out elbow joints, that is why Elcometer Exhaust T's are fitted with sacrificial wear plugs to minimise wear and maximise lifetime.

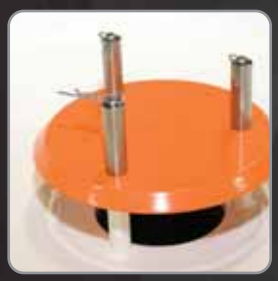

Adjustable Deflector Plates

The adjustable height deflector plate is designed to prevent abrasive escaping the blast machine when the pop up valve is engaged - keeping you safe.

Large Inspection Access

Large, easy to remove access doors to make maintenance easier and faster.

Reinforced Pop Up Valves

The heavy duty internal pop up valve is long lasting and quickly responds to pressurisation.

Narrow & Protected

Designed to fit through most standard doorways, valves and pipework are protected, even when laid down during transportation.

Flexible Pusher Lines

Flexible pusher line ensures air flow without pressure loss caused by elbows.

Air Manifold

The Elcometer Air Manifold allows multiple outlets for ancillary equipment and a pressure relief valve.

Waterproof Sieves & Lids

Optional sieves & lids are designed to fit over the top of the machine to prevent water ingress, keeping the media dry.

Balanced by Design

Easy to manoeuvre on site by one person, no matter their size.

PERFORMANCE

Whether you are blasting at a dockyard or in a blast room, Elcometer offers a range of PERFORMANCE **blast machines**, from **20 up to 285 litres** (0.7 - 10.06cu ft), available with **12bar** (174psi) working pressure to maximise productivity.

	Options	Elcometer 1020	Elcometer 1440
Capacity	Volume	20 litres (0.70cu ft)	40 litres (1.41cu ft)
	Aluminium Grit	47kg (102lbs)	94kg (206lbs)
	Steel Shot/Garnet	88kg (193lbs)	176kg (388lbs)
Valve Options	GV/MGV: General Valve/ Mini General Valve AGV: Automatic General Valve	MGV	GV AGV
Dimensions	Pot Diameter	254mm (10")	356mm (14")
	Height	880mm (35")	1015mm (40")
	Width	565mm (22")	615mm (24")
	Depth	562mm (22")	714mm (28")
	Weight	70kg (154lbs)	95kg (209lbs)

Elcometer PERFORMANCE blast machines are **CE approved** and fully tested and certified to **PED 2014/68EU** with a maximum working pressure of 12bar (174psi).

Elcometer 1460	Elcometer 20100	Elcometer 24200	Elcometer 24285
60 litres (2.11cu ft)	100 litres (3.53cu ft)	200 litres (7.06cu ft)	285 litres (10.06cu ft)
140kg (308lbs)	234kg (515lbs)	468kg (1031lbs)	667kg (1469lbs)
264kg (580lbs)	440kg (971lbs)	880kg (1942lbs)	1254kg (2767lbs)
GV AGV	GV AGV	GV AGV	GV AGV
356mm (14")	508mm (20")	610mm (24")	610mm (24")
1165mm (46")	1175mm (46")	1380mm (54")	1665mm (66")
615mm (24")	704mm (28")	794mm (31")	794mm (31")
714mm (28")	865mm (34")	1109mm (44")	1109mm (44")
107kg (236lbs)	153kg (337lbs)	205kg (452lbs)	231kg (509lbs)

PERFORMANCE

Kit Selection	Elcometer 1020		Elcometer 1440			
Key Features	Ideal for touch-up applications and spot blasting. Compact, low profile size is easy to fill with abrasive.		Ideal for touch-up applications and spot blasting. Compact size with heavy duty wheels make for easy manoeuvre in small spaces.			
Elcometer Blast Machine Kits are available with:	**Kit 1**	**Kit 2**	**Kit 1**		**Kit 2**	
Part Numbers	M1020-MGV1-B	M1020-MGV2-B	M1440-GV1-B	M1440-AGV1-B	M1440-GV2-B	M1440-AGV2-B
Abrasive Blast Machine	20 litre (0.70cu ft)		40 litres (1.41cu ft)			
Pressure Test Certificate	●	●	●	●	●	●
RCV4000+ Remote Control Valve with Air Manifold, Exhaust & Silencer	●	●	●	●	●	●
Pneumatic Control Hose & Deadman's Handle (DMHII)	●	●	●	●	●	●
Choke Valve and Pusher Line	●	●	●	●	●	●
Abrasive Metering Valve with Mixer T[1] and Metal Pot Coupling	MG*	MG*	G	A	G	A
Moisture Separator	●	●	●	●	●	●
20m (65.6ft) 1¼" (32mm) ID Blast Hose with Cast Iron Hose Couplings & Nylon Nozzle Holder		●[2]			●	●
Externally Mounted Sieve and Lid		●			●	●

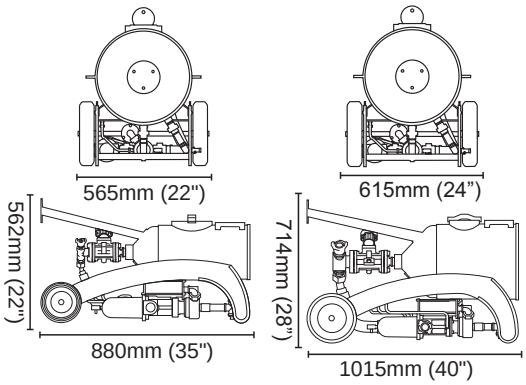

[1] Elcometer 1020 blast machine is supplied with a Flanged T

[2] Elcometer 1020 blast machine is supplied with a 10m Pneumatic Control Hose and Blast Hose

Elcometer 1460				Elcometer 20100				Elcometer 24200				Elcometer 24285			
Ideal for small blast rooms and spot blasting. Compact size with heavy duty wheels make for easy manoeuvre in small spaces.				Ideal for continuous blasting applications. Compact size with heavy duty wheels make for easy manoeuvre in small spaces.				Ideal for mobile contractors who need continuous high production blasting as its large capacity reduces down time refilling the hopper. The twin wheeled portable machine is safe and easy to manoeuvre.				Ideal for continuous high production blasting, on site or in a blast room. A single blast machine can be used by one or two operators. The twin wheeled portable machine is safe and easy to manoeuvre.			
Kit 1		Kit 2		Kit 1		Kit 2		Kit 1		Kit 2		Kit 1		Kit 2	
M1460-GV1-B	M1460-AGV1-B	M1460-GV2-B	M1460-AGV2-B	M20100-GV1-B	M20100-AGV1-B	M20100-GV2-B	M20100-AGV2-B	M24200-GV1-B	M24200-AGV1-B	M24200-GV2-B	M24200-AGV2-B	M24285-GV1-B	M24285-AGV1-B	M24285-GV2-B	M24285-AGV2-B
60 litres (2.11cu ft)				100 litres (3.53cu ft)				200 litres (7.06cu ft)				285 litres (10.06cu ft)			
●	●	●	●	●	●	●	●	●	●	●	●	●	●	●	●
●	●	●	●	●	●	●	●	●	●	●	●	●	●	●	●
●	●	●	●	●	●	●	●	●	●	●	●	●	●	●	●
●	●	●	●	●	●	●	●	●	●	●	●	●	●	●	●
G	A	G	A	G	A	G	A	G	A	G	A	G	A	G	A
●	●	●	●	●	●	●	●	●	●	●	●	●	●	●	●
		●	●			●	●			●	●			●	●
		●	●			●	●			●	●			●	●

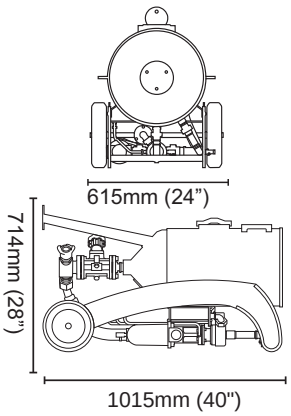

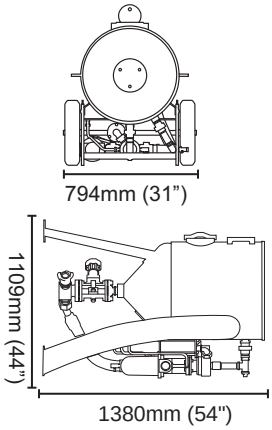

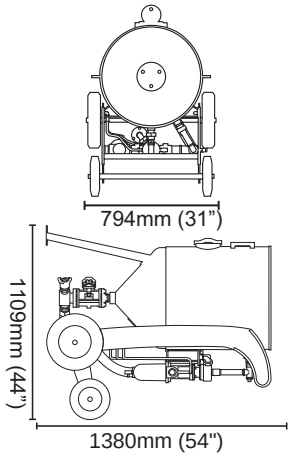

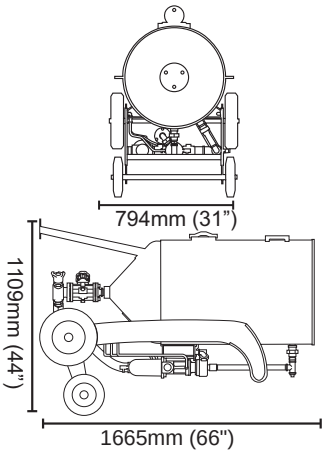

Elcometer 24285 Portable Abrasive Blast Machine

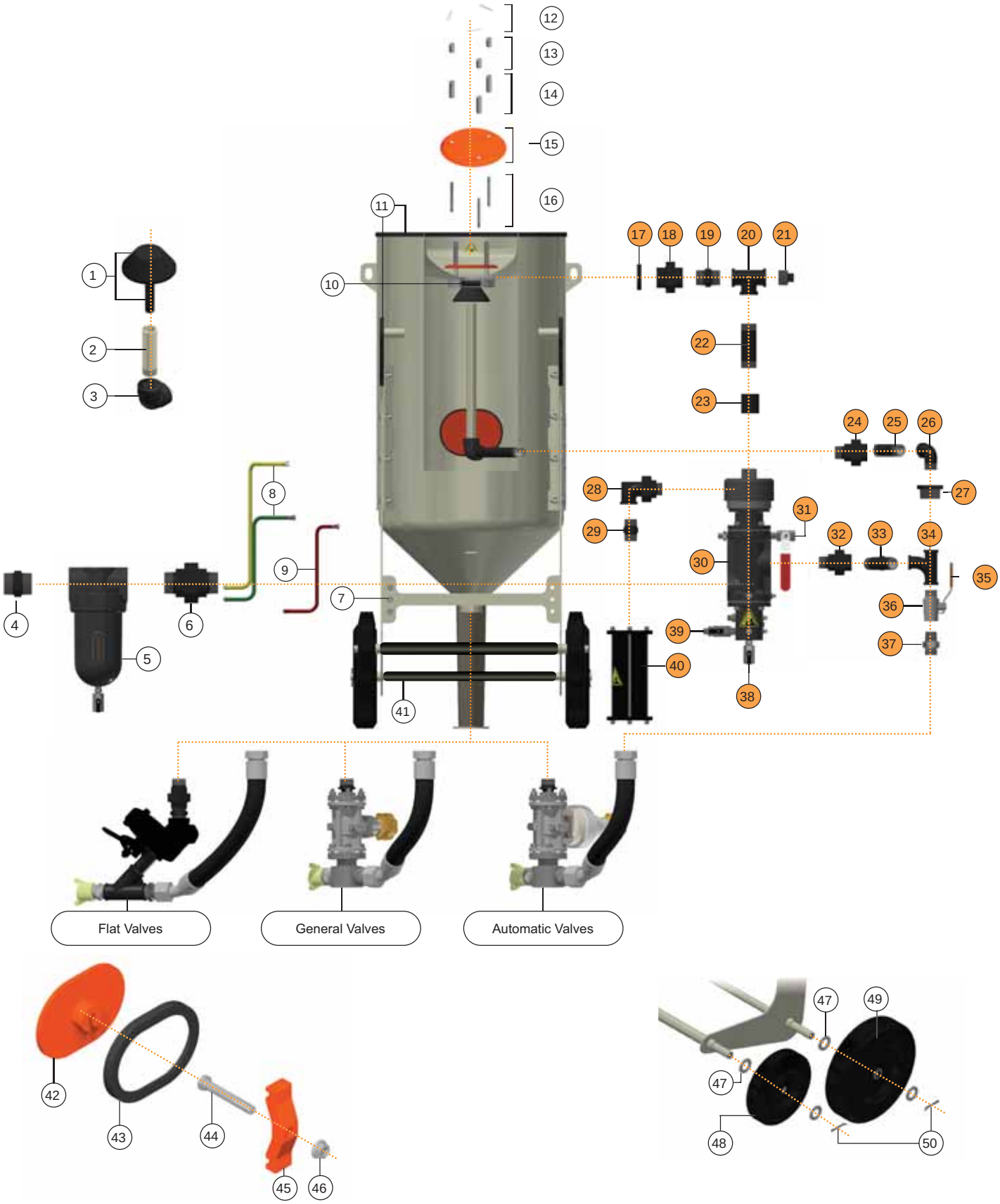

Elcometer 24285 Portable Abrasive Blast Machine

Spare Parts

Item	Part Number	Description
1	MT28622	Pop Up Valve
2	MT28631-6	1" (25mm) Pop Up Shaft for Elcometer 24285
3	MT29661	1" (25mm) Female 90° Equal Elbow (Service Item Only)
4	MT29663	1½" (38mm) Hex Nipple
5	MT28617	Moisture Separator Assembly
6	MT29662	1½" (38mm) Male/Male Union Taper Seat
7	MT29664	¼" (6mm) Bulkhead Connector (x3)
8	MT29727	Elcometer 24285 Twin Airline Hose Assembly (Yellow & Green)
9	MT29728	Airline Assembly for Elcometer 24285 (Red)
10	MT28627-5	Pop Up Valve O-Ring (x5)
11	MT29601	Protective Edging Strip Kit (2.7m) (8.9ft)
12	MT29667	Spring Cotter Pin Type E (x3)
13	MT29719	Short Deflector Plate Spacer - 25mm (x3) (1")
14	MT29720	Long Deflector Plate Spacer - 51mm (x3) (2")
15	MT29670	Deflector Plate
16	MT28629-3	Deflector Plate Shaft - 82mm (x3) (3.2")
17	MT29672	1" (25mm) Backnut (Recessed)
18	MT29673	1" (25mm) Female/Female Union Taper Seat
19	MT29679	1" (25mm) Hex Nipple
20	MT29680	1" (25mm) Exhaust T Assembly (complete with MT29681 Exhaust Plug)
21	MT29681	1" (25mm) Exhaust Plug
22	MT29729	1" (25mm) Pipe for Elcometer 24285 (448mm) (17.6")
23	MT29683	1" (25mm) Socket
24	MT29704	1" (25mm) Male/Female Equal Union Taper Seat
25	MT29730	1" (25mm) Pipe for Elcometer 24285 (106mm) (4.2")
26	MT29706	1" (25mm) Male/Female 90° Elbow
27	MT29707	1" to 1½" Reducing Bush (25 x 38mm)
28	MT28599	¾" (19mm) Reinforced Union Elbow
29	MT29688	¾" (19mm) Hex Nipple
30	MT29465	Elcometer RCV4000+ Remote Control Valve
31	MT29656	Petcock Valve Assembly (Red Handle)
32	MT30122-5	1½" (38mm) Male/Female Equal Union Taper Seat
33	MT29726	1½" (38mm) Pipe for Elcometer 24285 (84mm) (3.3")
34	MT29708	1½" (38mm) Equal Pitcher T
35	MT30094	1½" (38mm) Choke Valve Handle
36	MT29177	1½" (38mm) Choke Valve Handle Assembly (includes MT30094 Choke Valve Handle)
37	MT29710	1½" (38mm) 60° Cone Male/Male Adaptor
38	MT29658	¼" (6mm) Ball Valve Assembly (Black Handle)
39	MT29660	¼" (6mm) Airline Ball Valve Assembly (Black Handle)
40	MT28597	Exhaust Silencer Assembl
41	MT29692-4	Protection Guard for Elcometer 24285
42	MT28616	Elcometer Inspection Hatch Door for Elcometer 24285
43	MT28613	ElcoFit™ Door Sealing Gasket
44	MT29695	Elcometer Inspection Door Hatch Bolt - M16 x 110mm
45	MT28615	Inspection Hatch Door Yoke
46	MT29696	M16 Hexagon Flanged Nut
47	MT29697	Flat Washer (x8)
48	MT28636	Ø250mm (9.8") Diameter Wheel (x1)
49	MT28637	Ø350mm (13.8") Diameter Wheel (x1)
50	MT29698	Split Cotter Pin (x4)
-	MT29490-6	Elcometer RCV4000+ & Pipework Assembly Service Kit (contains items in orange)
-	MT29180	Elcometer Safety Label Kit